Product Description:

- Cylindrical circular hole installation,rectangular screw installation method optional.
- Suitable for applications such as automotive parts,packaging, logistics transportation,metal processing,etc.

Product features:

- Compact size ang appearance
- Visible red light

Polarized retro-reflective

Type	Distance	Beam	Output	Connection	Wiring
OSQ18-RPVP6 *M[1)]	3.5m	Red	PNP	Cable	Fig.1
OSQ18-RPVP6Q	3.5m	Red	PNP	M12 Connetor	Fig.2
OSQ18-RPVN6 *M[1)]	3.5m	Red	NPN	Cable	Fig.3
OSQ18-RPVN6Q	3.5m	Red	NPN	M12 Connetor	Fig.4

Note 1): * M refers to the cable length in meters. If there is no * M in the model, the default cable length is 2 meters.

TECHNICAL SPECIFICATION

OPERATING VOLTAGE	10...30 V DC
RIPPLE VOLTAGE	≤10%
LIGHT SOURCE TYPE	Red LED
OUTPUT CHARACTERISTIC	PNP/NPN
LOAD CURRENT	≤200mA
SWITCHING FREQUENCY	800Hz
ADJUSTMENT OF SENSITIVITY	Knob adjustment
AMBIENT TEMPERATURE OPERATION	-25°C...+55°C
AMBIENT TEMPERATURE STORAGE	-40°C...+70°C
CIRCUIT PROTECTION	Short-circuit protection, reverse polarity protection, over-load protection
PROTECTION DEGREE	IP67
HOUSING MATERIAL	PBT+ABS
CONNECTING TYPE	*m TPU cable /M12 connector

OSQ18 SERIES PHOTOELECTRIC SENSOR

DIMENSIONS

M12 Connetor

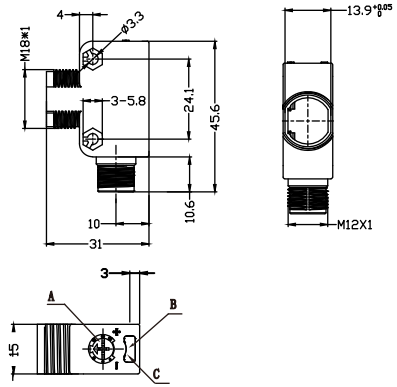

Cable

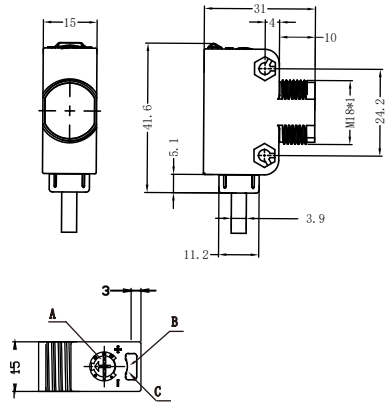

INDICATORS

A	Potentiometer	
B	output indicator	Yellow
C	stable indicator	Green

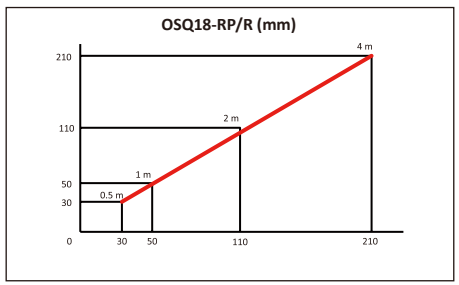

ELECTRICAL CONNECTION

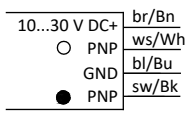

Fig.1

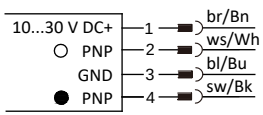

Fig.2

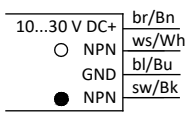

Fig.3

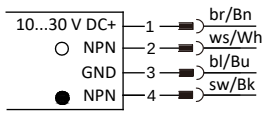

Fig.4

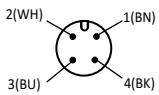

○ =Light on
● =Dark on